V1.0-202425

Right Angle Waveguide to Coaxial Adapter, RWR137N
WR137 to N Female, FDP70(UDR) Flange

Dimensions(mm) Tolerance±1%

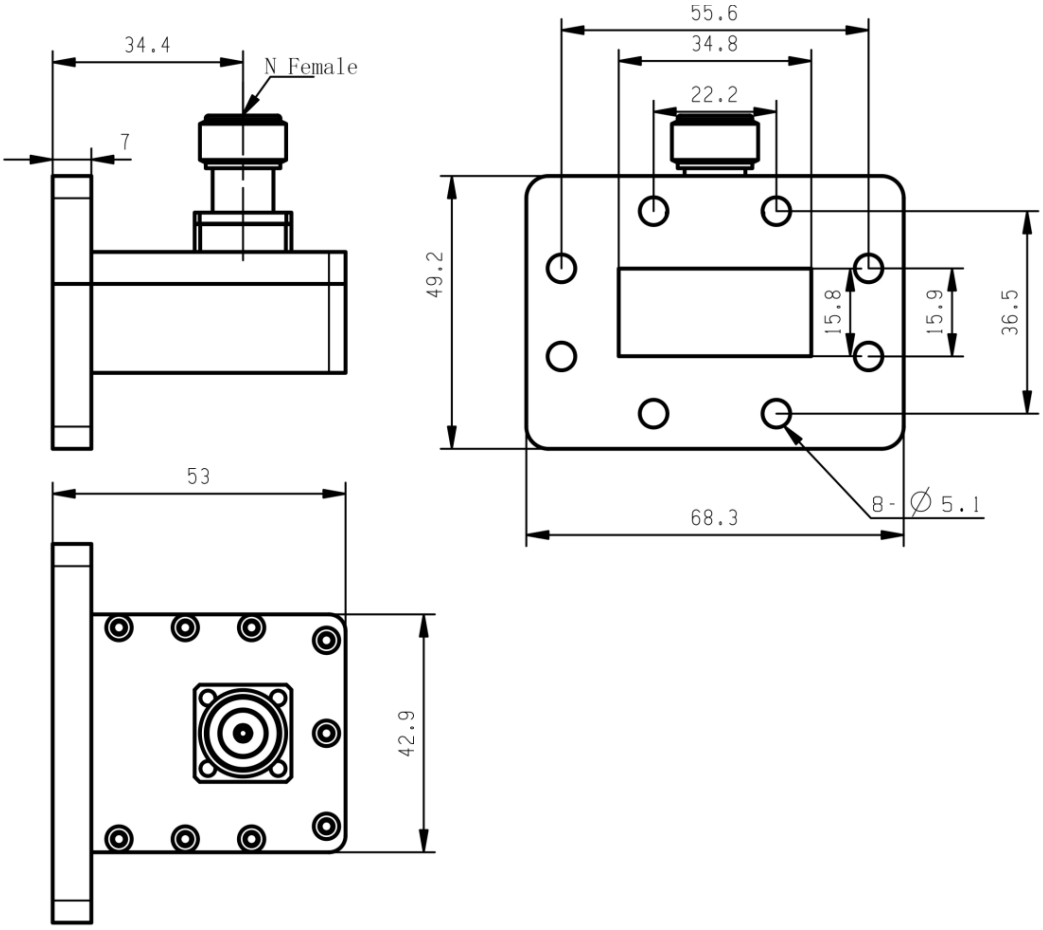

Electrical & Environmental

Frequency Range	5.37-8.2GHz	**Impedance**	50 ohm	**VSWR**	1.2 max
Input Avg Power	200W @25℃	**Peak Power**	3000W	**Insertion Loss**	0.2 dB max

Mechanical & Product Information

Product Number	RWR137N, H-Grade	**Body Geometry**	Right Angle
Waveguide Body	Aluminum, grey painted	**Waveguide**	WR137, FDP70(UDR) Flange
Connector Body	Passivated stainless steel	**Coax Connector**	N Female
Center Contact	1.27μm Gold plated beryllium copper		
Operating Temp	-40℃ to 70℃	**Net Weight**	About 145.8g

V1.0-202425

Right Angle Waveguide to Coaxial Adapter, RWR137N
WR137 to N Female, FDP70(UDR) Flange
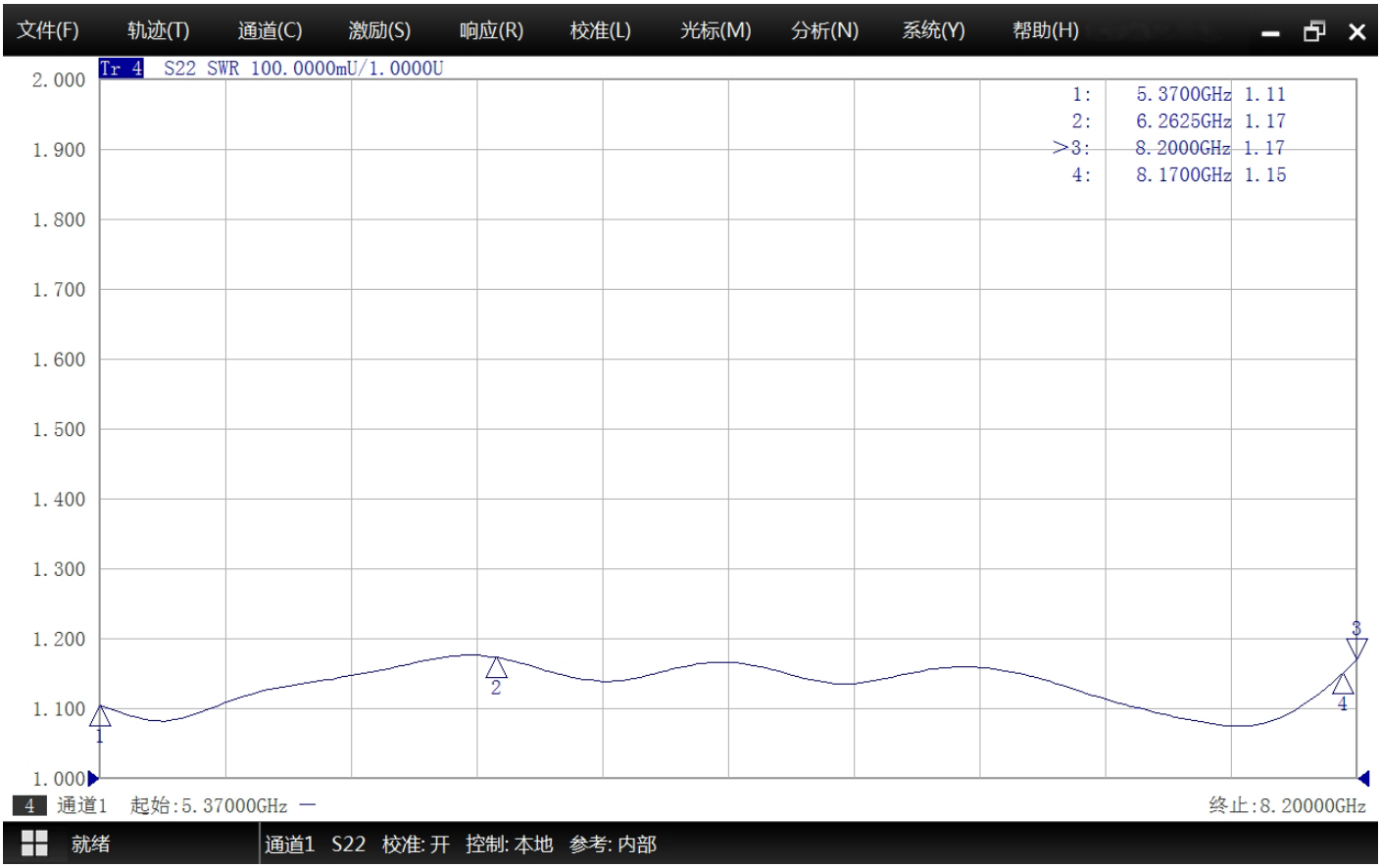
Typical Test Data