V1.0-202425

End Launch Waveguide to Coaxial Adapter, RWR121E WR12 to 1.0mm Female, FUGP740 Circular Flange

Dimensions(mm) Tolerance±1%

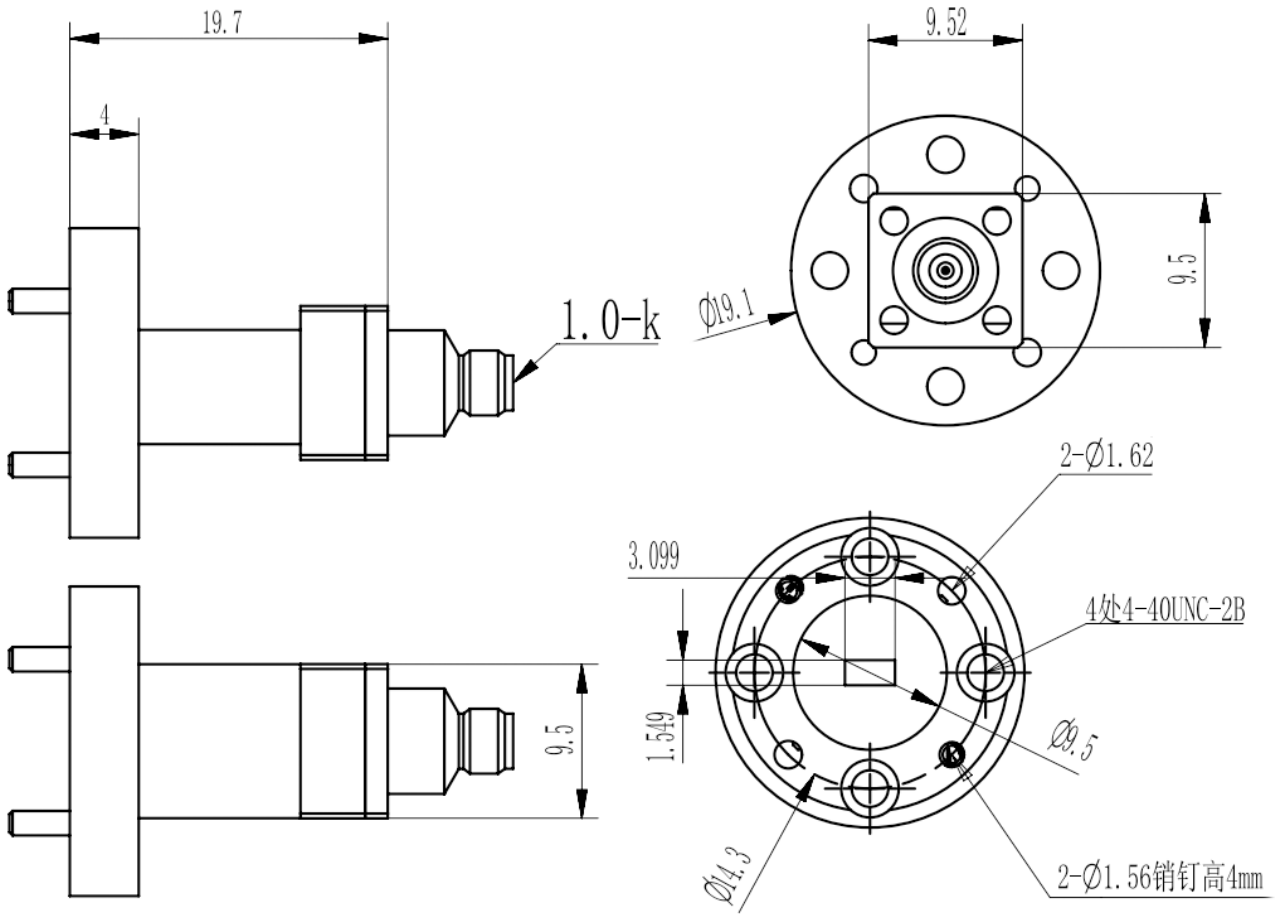

Electrical & Environmental

Frequency Range	60.5-91.9GHz	**Impedance**	50 ohm	**VSWR**	1.5 max
Input Avg Power	3W @25℃	**Peak Power**	-	**Insertion Loss**	1.2 dB max

Mechanical & Product Information

Product Number	RWR121E, H-Grade	**Body Geometry**	End Launch
Waveguide Body	Copper, gold plated	**Waveguide**	WR12, FUGP740 Circular Flange
Connector Body	Passivated stainless steel	**Coax Connector**	1.0mm Female
Center Contact	Gold plated beryllium copper		
Operating Temp	-40℃ to 70℃	**Net Weight**	About 17.5g

V1.0-202425

End Launch Waveguide to Coaxial Adapter, RWR121E WR12 to 1.0mm Female, FUGP740 Circular Flange
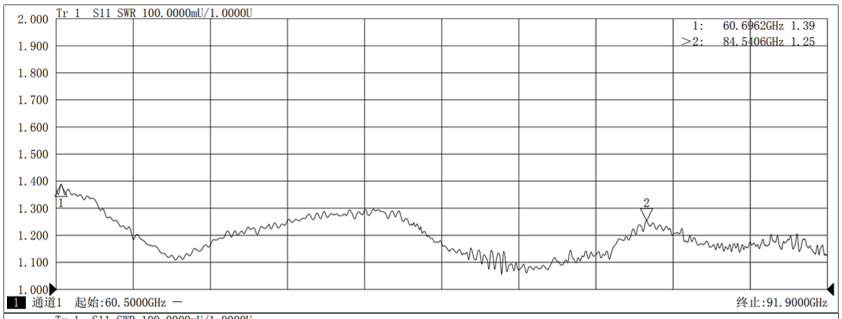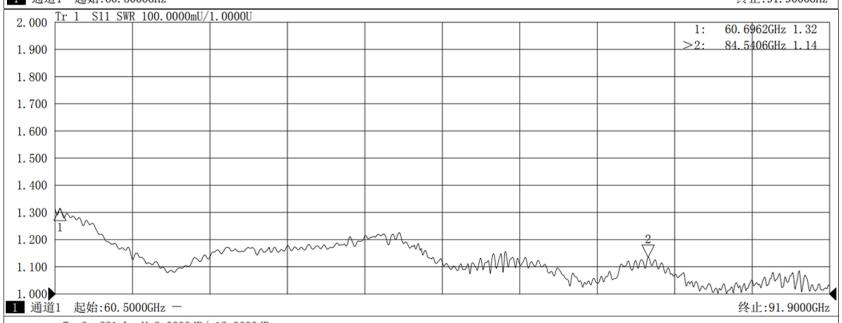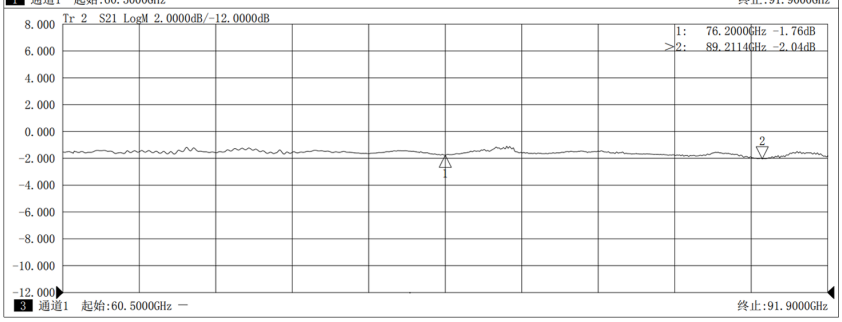
Typical Test Data