V1.0-2024120

N Male Coaxial Termination, RT615NM
DC-6GHz, 15W, Round

Dimensions(mm) Tolerance±1%

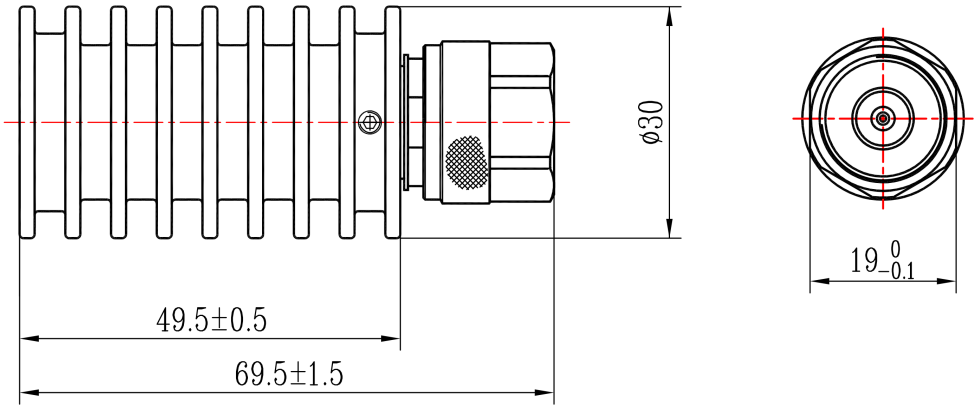

Electrical & Environmental

Frequency Range	DC-6GHz	**Impedance**	50 ohm	**VSWR**	1.25 max
Input Avg Power	15W @25℃	**Peak Power**	500W (5μsec pulse width, 1% duty cycle)		

Mechanical & Product Information

Product Number	RT615NM, Professional	**Connector**	N Male
Connector Body	Ternary alloy plated brass	**Heat Sink**	Black anodized aluminum
Center Contact	Gold plated brass		
Operating Temp		**Net Weight**	-

Typical Test Data

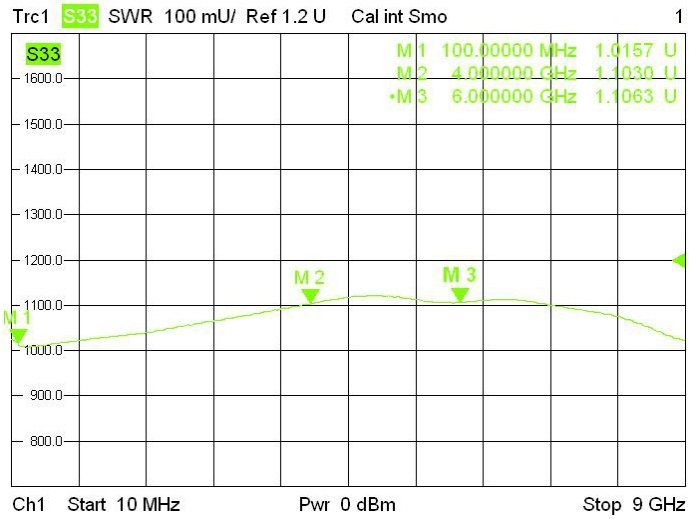

Notes

1.Customized outlines and optimal VSWR available.

2. Refer to the derating curve for power input,derate linearly to **2W at 100℃**.
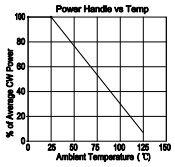
3.To maintain best performance, recommended to use fan to keep the case temp under 85°C.