V1.0-2024120

L29(DIN 7/16) Male Coaxial Termination, RT4100DM
DC-4GHz, 100W, Round

Dimensions(mm) Tolerance±1%

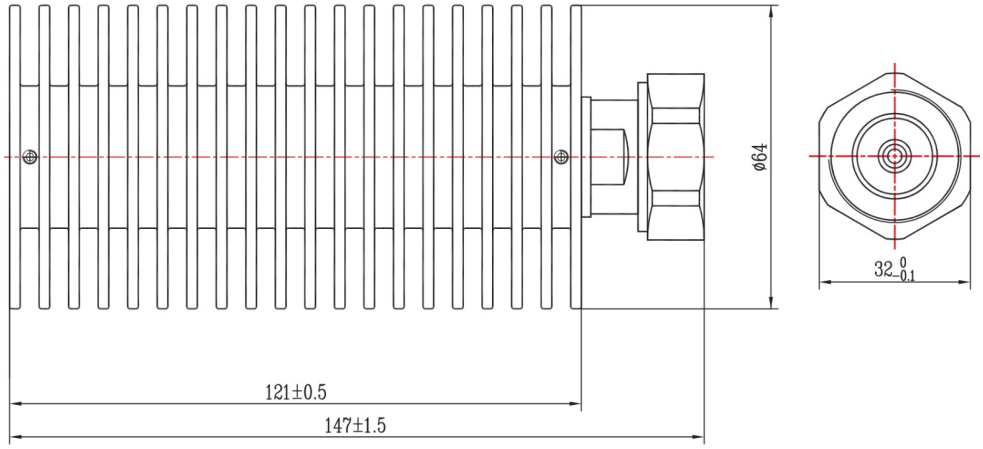

Electrical & Environmental

Frequency Range	DC-4GHz	**Impedance**	50 ohm	**VSWR**	1.2 max
Input Avg Power	100W @25℃	**Peak Power**	5kW (5μsec pulse width, 0.5% duty cycle)		

Mechanical & Product Information

Product Number	RT4100DM, Professional	**Connector**	L29(DIN 7/16) Male
Connector Body	Ternary alloy plated brass	**Heat Sink**	Black anodized aluminum
Center Contact	Gold plated brass		
Operating Temp		**Net Weight**	-

Typical Test Data

Notes

1.Customized outlines and optimal VSWR available.

2. Refer to the derating curve for power input,derate linearly to **10W at 100°C**.
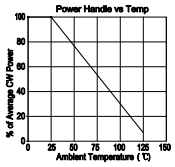
3.To maintain best performance, recommended to use fan to keep the case temp under 85°C.