V1.0-2025314

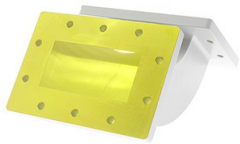

WR340(R26) Radius Right Angle Bent Waveguide, RWGWE340-L1-L2 2.17-3.3GHz, UDR26 Flange, E-Bend

Dimensions(mm) Tolerance±1%

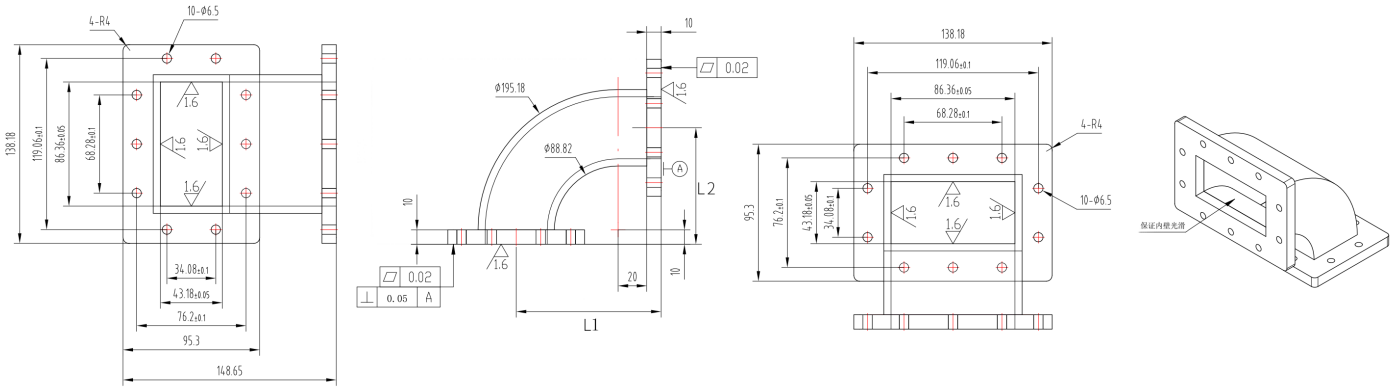

Electrical & Environmental

Frequency Range	2.17-3.3GHz
VSWR	1.15 Max
Temperature Range	-40°C～+70°C

Mechanical & Product Information

Product Number	RWGWE340-L1-L2
Product Type	Bent Waveguide
Waveguide 1	WR340(R26), UDR26 Flange
Waveguide 2	WR340(R26), UDR26 Flange
Waveguide Body	Aluminum, grey painted
Center Contact	Aluminum, electric conductive oxidation

Product Selection，Customizable			
RFTOP P/N	L1(mm)	L2(mm)	IL(dB)
RWGWE340-100-100	100	100	0.06
RWGWE340-101-81	101	81	0.06
RWGWE340-144-81	144	81	0.06

Notes

1. Customized services include: length and structure and flange type.
2. The marked loss is the theoretical estimated loss, for reference only, the specific product after processing test shall prevail.
3. Please refer to the second page of the specification of typical electrical performance measured curve.