V1.0-2024411

SMA 90 Degree Bridge, RDCBA6F18S-8
6-18GHz, 50W

Dimensions(mm) Tolerance±1%

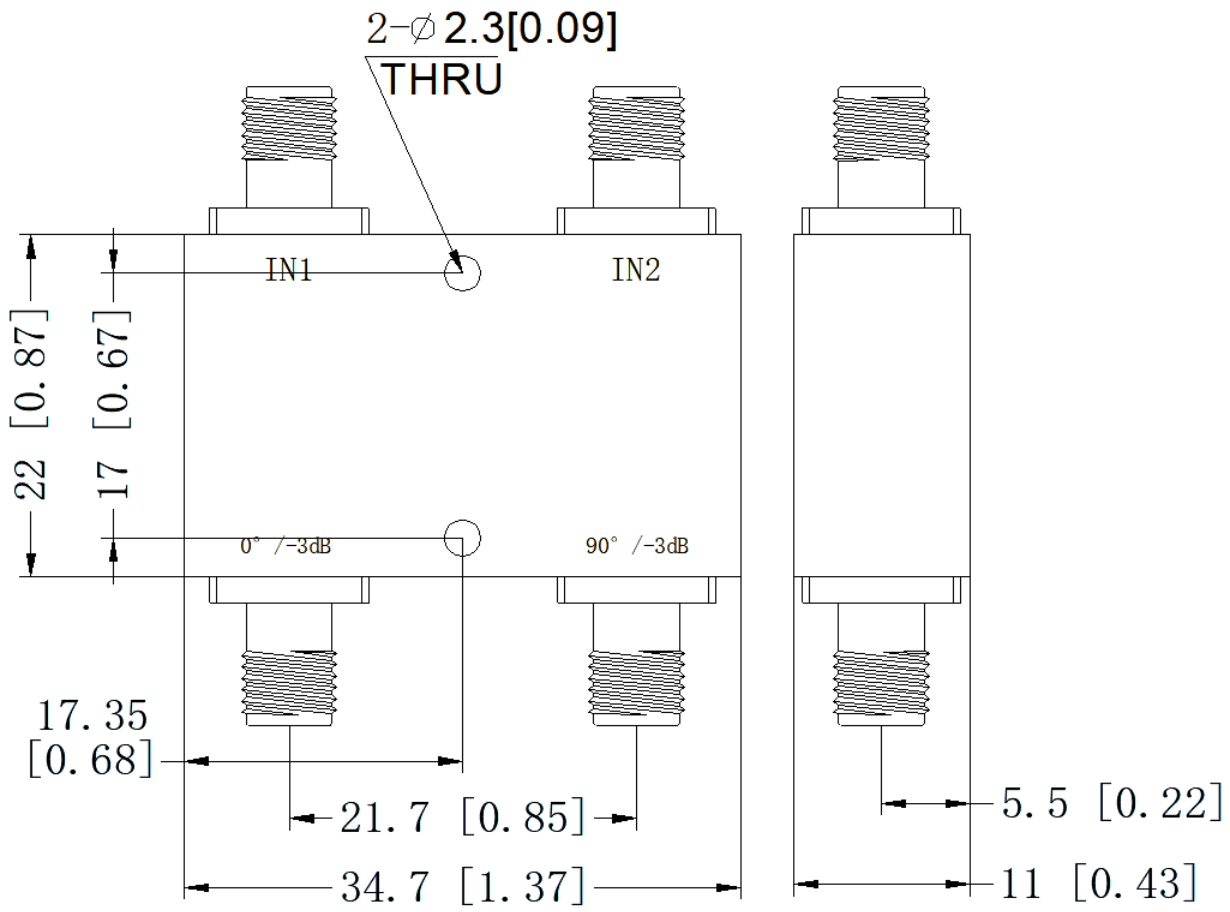

Electrical & Environmental

Frequency Range	6-18GHz	**Impedance**	50 Ohm
VSWR Primary	1.5 Max		
VSWR Secondary	Max		
Insertion Loss	1.2dB Max		
Phase Balance	±8°		
Input Avg Power	50 Watts max @25°C (Derate linearly to 5 Watt at 100°C)		
Operating Temp	-45°C~+85°C		

Mechanical & Product Information

Product Number	RDCBA6F18S-8	**Product Type**	90 Degree Bridge
Connector	SMA Female	**Connector Body**	Passivated stainless steel
Center Contact	Gold plated beryllium copper		
Housing	Light blue paint		
Dimensions	34.7×22×11mm	**Net Weight**	-