2.92mm Female Cable Connector, RC40KFB-B086E
DC-40GHz, Straight, Attachment for 086 Cable

Dimensions(mm) Tolerance±1%

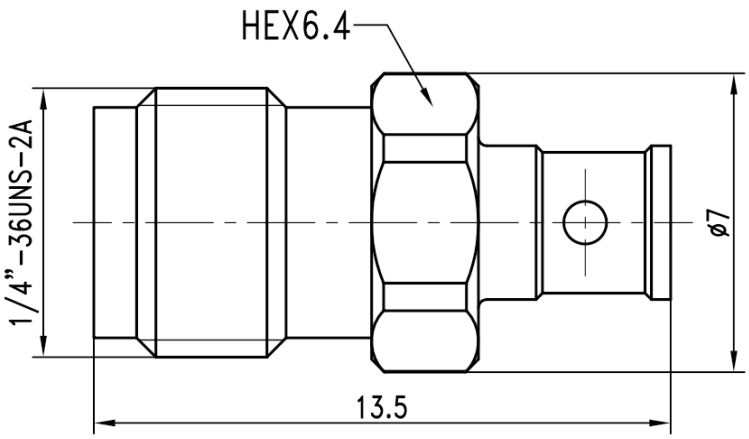

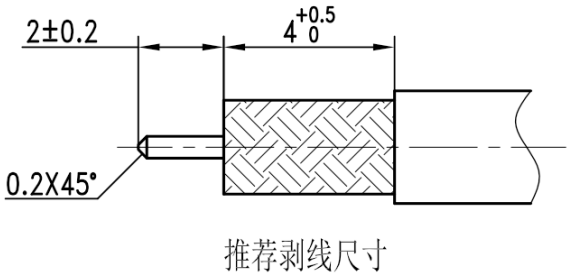

Electrical & Environmental

Frequency Range	DC-40GHz	**Impedance**	50 ohm
VSWR	-	**Withstand Voltage**	750 V
Mating Cycles	> 500 Cycles	**Temperature Range**	-55°C ~ +165°C

Mechanical & Product Information

Product Number	RC40KFB-B086E, P-Grade	**Connector**	2.92mm(K,SK) Female
Shape/Mounting	Straight	**Attachment Method**	Solder
Attachment for	086 Series Cable		
Connector Body	Gold plated brass	**Insulator**	PEI
Center Contact	Gold plated beryllium copper		
Dimension	13.5(L)mm	**Net Weight**	-