V1.0-2024115

2.92mm Coaxial Fixed Attenuator, R4015U-XX
DC-40GHz, 15W, 3-40dB, Unidirectional, Round

Dimensions(mm) Tolerance±1%

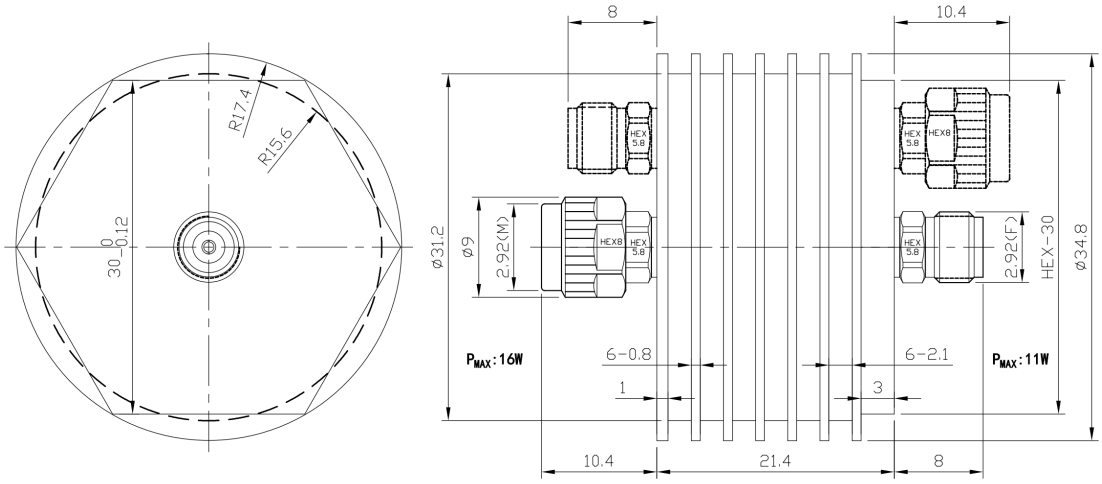

Typical Value
RFTOP P/N
R4015U-3
R4015U-6
R4015U-10
R4015U-20
R4015U-30
R4015U-40

Electrical & Environmental

Frequency Range	DC-40GHz	**Impedance**	50 ohm	**VSWR**	1.26 max
Input Avg Power	15W @25℃	**Peak Power**	200W (5μsec pulse width, 4% duty cycle)		
Temp Coefficient	<0.0004 dB/dB/℃	**Attenuation**	3-40dB，Customizable		
Direction	Unidirectional,2.92mm female to 2.92mm male				

Mechanical & Product Information

Product Number	R4015U-XX, Military	**Connector**	2.92mm
Connector Body	Passivated stainless steel	**Heat Sink**	Black anodized aluminum
Center Contact	1.27um Gold plated beryllium copper		
Operating Temp	-55℃~+100℃	**Net Weight**	About 55.0g

Attenuation&Accuracy(DC-40GHz)

Attenuation(dB)	3-10	20	30	40
Accuracy(dB)	-1.2/+1.5	-1.0/+1.0	-1.0/+1.0	-1.0/+1.0

Notes
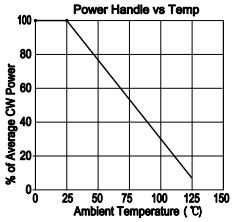
1. To maintain best performance, recommended to use fan to keep the case temp under 85°C.
2. Refer to the derating curve for power input,derate linearly to 2 W at 100°C.
3. Always pay attention to the direction of attenuators and note IN/OUT markings.
4. Customized dB values,outlines and optimal accuracy & VSWR available.