V1.0-202513

# 3.5mm Coaxial Fixed Attenuator, R2730UH-XX
# DC-26.5GHz, 30W, 10-40dB, Unidirectional, Round

## Dimensions(mm) Tolerance±1%

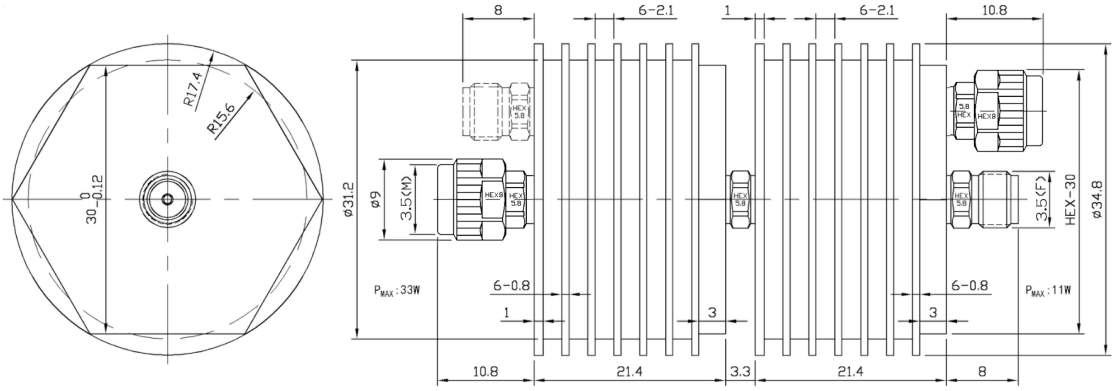


## Electrical & Environmental

| | |
|---|---|
| **Frequency Range** | DC-26.5GHz , 50Ohms |
| **VSWR** | 1.23 Max |
| **Input Avg Power** | 30W @25°C |
| **Peak Power** | 200W (5μsec pulse width, 6% duty cycle) |
| **Temp Coefficient** | <0.0004 dB/dB/°C |
| **Direction** | Unidirectional, 3.5mm male imput to 3.5mm female output |
| **Attenuation** | 10-40dB |
| **Operating Temp** | -55°C~+100°C |

## Mechanical & Product Information

| | |
|---|---|
| **Product Number** | R2730UH-XX |
| **Product Type** | Coaxial Fixed Attenuator, JP-Grade |
| **Connector** | 3.5mm male, 3.5mm female |
| **Connector Body** | Passivated stainless steel |
| **Center Contact** | 1.27um Gold plated beryllium copper |
| **Heat Sink** | Black anodized aluminum |
| **Net Weight** | About 95.0g |

1.Customized connectors, dimensions, directionality, PIM, dB values.

2.Refer to the RFTOP attenuator selection and usage guide.

| Product Selection，Customizable | | |
|---|---|---|
| RFTOP P/N | ATTEN | Accuracy |
| R2730UH-10 | 10 dB | ±1.8 dB |
| R2730UH-20 | 20 dB | ±1.0 dB |
| R2730UH-30 | 30 dB | ±1.0 dB |
| R2730UH-40 | 40 dB | ±1.0 dB |
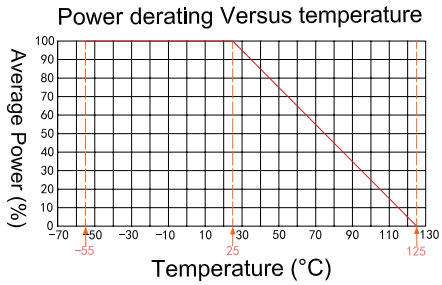
**Notes:** Pay attention to input/output. To ensure longevity and performance, do not use at full power for a long time. Peak power, pulse width, and duty cycle need to meet the requirements. Input high power, require heat dissipation, maintain temperature within 80°C. Reference Curve,derate linearly to 3W at 100°C.