V1.0-2024918

2.92mm Female to 2.92mm Female, Adapter, RA4001Y-2 DC-40GHz, Straight, Bulkhead

Dimensions(mm) Tolerance±1%

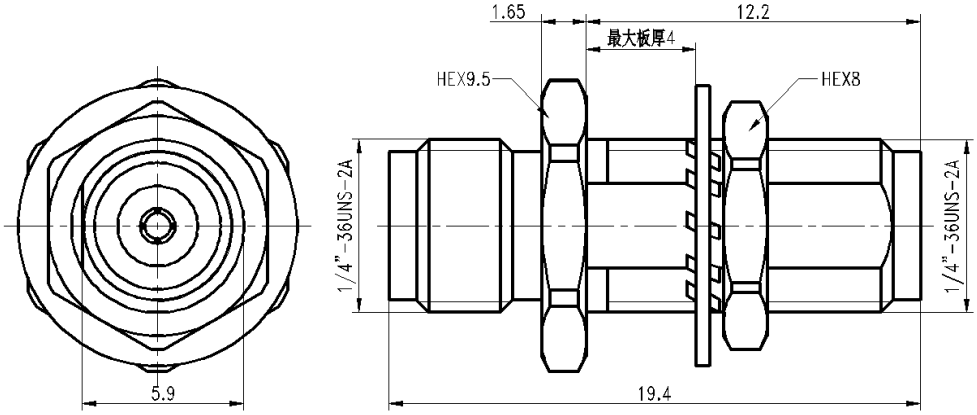

Electrical & Environmental

Frequency Range	DC-40GHz	**Impedance**	50 ohm
VSWR	1.15 max	**Operating Temp**	-55°C to +165°C

Mechanical & Product Information

Product Number	RA4001Y-2, JP-Grade	**Connector**	2.92mm Female to 2.92mm Female
Connector Body	Passivated stainless steel 316F	**Shape/Mounting**	Straight, Bulkhead
Center Contact	1.27um gold plated beryllium copper	**Insulator**	PEI
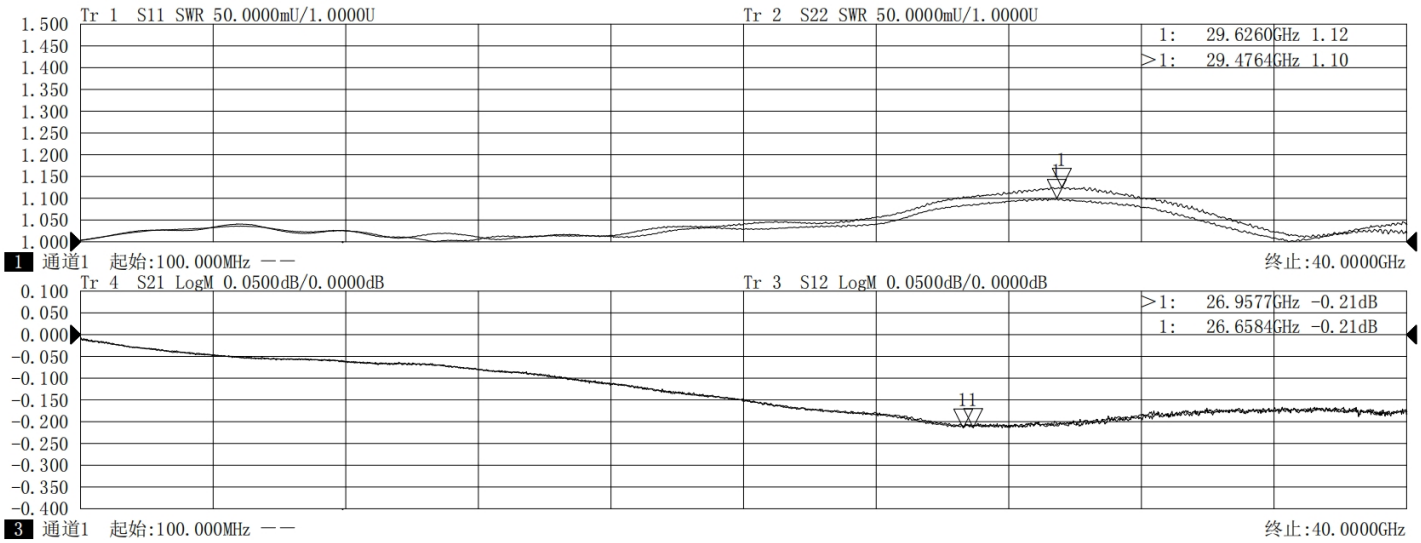
Typical Test Data