V1.0-2024219

SMA Female to SMA Female, Adapter, RA18S01F
DC-18GHz, Straight, 4 hole flange

Dimensions(mm) Tolerance±1%

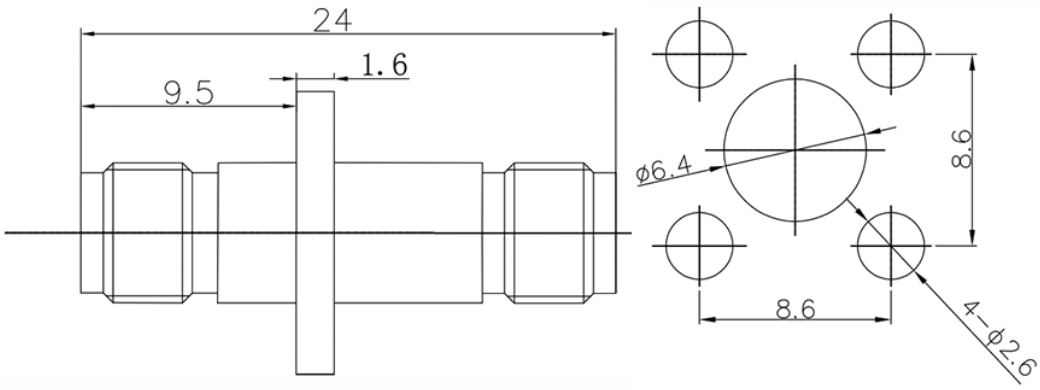

Electrical & Environmental

Frequency Range	DC-18GHz	**Impedance**	50 ohm
VSWR	1.15 max	**Operating Temp**	-55°C to +165°C

Mechanical & Product Information

Product Number	RA18S01F, E-Grade	**Connector**	SMA Female to SMA Female
Connector Body	Passivated stainless steel	**Shape/Mounting**	Straight, 4 hole flange
Center Contact	Gold plated beryllium copper	**Insulator**	PTFE