V1.0-2024531

BNC Female to N Female, Adapter, RA06B01
DC-18GHz, Straight

Dimensions(mm) Tolerance±1%

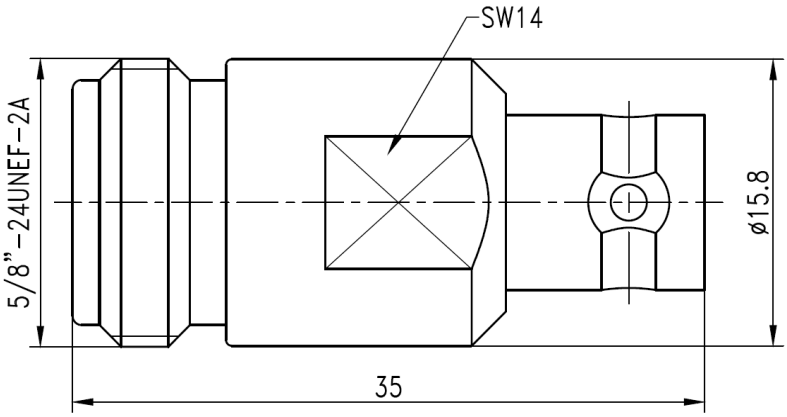

Electrical & Environmental

Frequency Range	DC-18GHz	**Impedance**	50 ohm
VSWR	1.2 max (6-18GHz); 1.15 max (DC-6GHz)	**Operating Temp**	-55°C to +165°C

Mechanical & Product Information

Product Number	RA06B01, JP-Grade	**Connector**	BNC Female to N Female
Connector Body	Passivated stainless steel 316F	**Shape/Mounting**	Straight, None
Center Contact	1.27um gold plated beryllium copper	**Insulator**	PEI
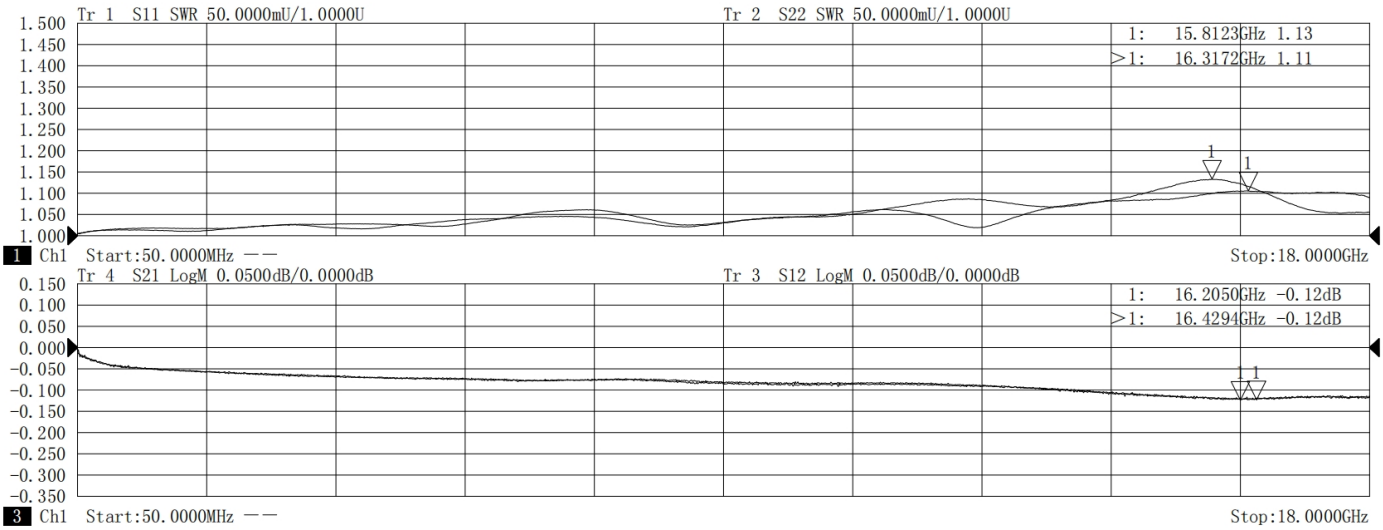
Typical Test Data